KEYNOTES

1.51 32" STAINLESS STEEL BOLLARD, 4" OD

SANITARY COVE BASE SURFACE PREPARATION REQUIREMENTS

1. REMOVE EXISTING WALL BASE. AT EXISTING WALL CONDITIONS, REMOVE ALL GYPSUM BOARD BELOW 12" AFF AND REPLACE WITH GLASS-MAT BACKER OF SAME THICKNESS. IF FRP IS IN GOOD CONDITION REPLACE DAMAGED BASE WITH NEW BASE.
2. REMOVE AND REPLACE WALL FINISH TO NEAREST JOINT AS REQUIRED TO PERFORM GLASS-MAT BACKER INSTALLATION.
3. NOT USED
4. REMOVE ALL DEBRIS AND ANY REMAINING GROUT, CLEAN SURFACES AS REQUIRED FOR PROPER INSTALLATION OF CONSTRUCTION MATERIAL AND FINISHES.
5. INSTALL BUILDING TAPE AND FIBERGLASS MESH TAPE AS INDICATED.

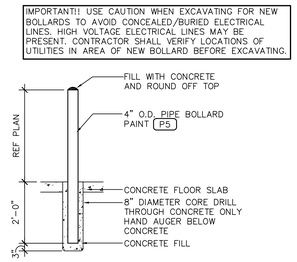

SECTION AT INTERIOR

12 GARDEN CENTER/ INTERIOR BOLLARD DETAIL

1/2" = 1'-0" 122608 C\A051-008

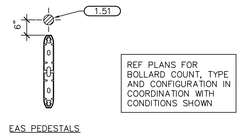

EAS PEDESTALS

11 BOLLARD DETAIL

1/2" = 1'-0"

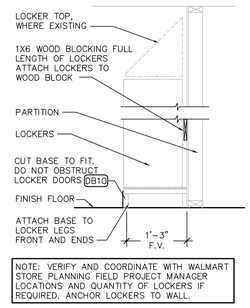

10 LOCKER ANCHOR DETAIL

NTS

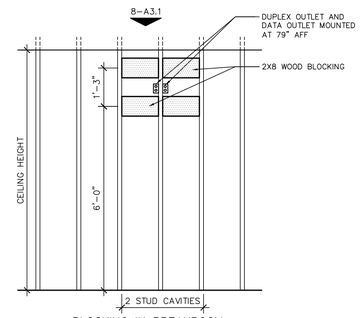

BLOCKING IN BREAKROOM

7 TV BRACKET BLOCKING

1/2" = 1'-0" 040615 BR01-04

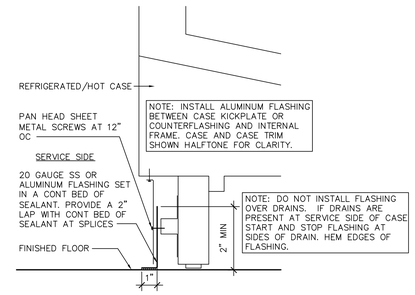

6 CASE FLASHING AT SERVICE DEPT

3"=1'-0"

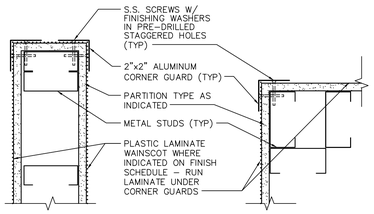

9 CORNER GUARD

3"=1'-0" 041615 BR01-04

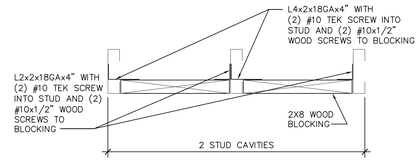

8 TV BRACKET BLOCKING PLAN

1-1/2" = 1'-0"

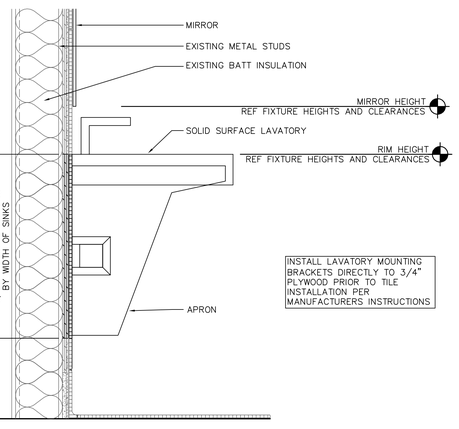

5 SECTION AT LAVATORY

1 1/2""=1'-0"

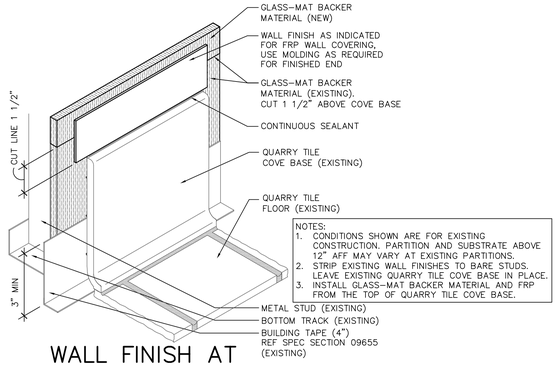

4 WALL FINISH AT EXISTING COVE BASE

3"=1'-0"

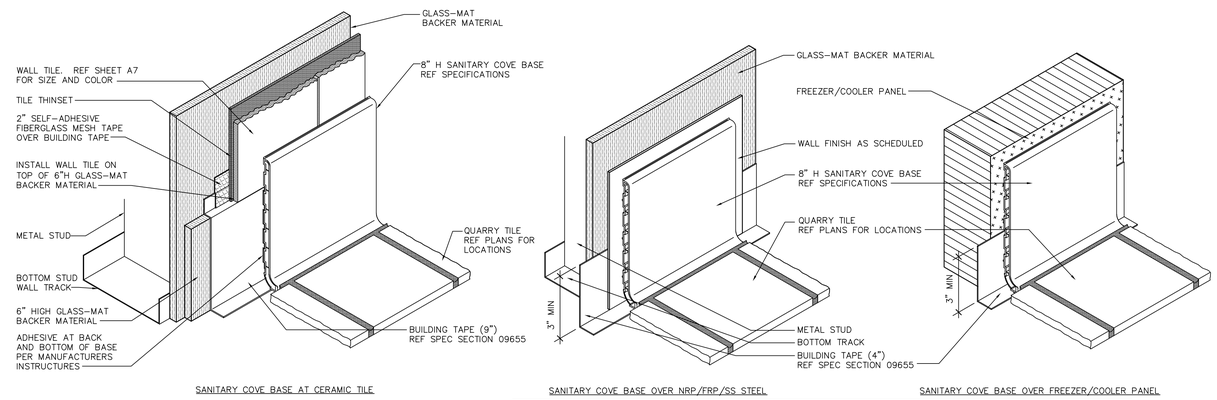

NOTES:
1. CONDITIONS SHOWN ARE FOR NEW CONSTRUCTION. PARTITION AND SUBSTRATE ABOVE 12" AFF MAY VARY AT EXISTING PARTITIONS.
2. TRIM EXCESS BUILDING TAPE FROM PROJECTING HORIZONTAL FLAP PRIOR TO INSTALLATION OF BASE.
3. REF 2,3-A3.1 FOR ADDITIONAL INFORMATION AT INSIDE AND OUTSIDE CORNERS.
4. GC TO PROVIDE MECHANICAL FASTENERS PER MANUFACTURERS WRITTEN INSTRUCTIONS.
5. USE ACCESSORIES PROVIDED AND INSTALL SANITARY COVE BASE PER MANUFACTURERS INSTRUCTIONS.

1A SANITARY COVE BASE DETAILS (QT)

3"=1'-0" 052810 C\ga040-013

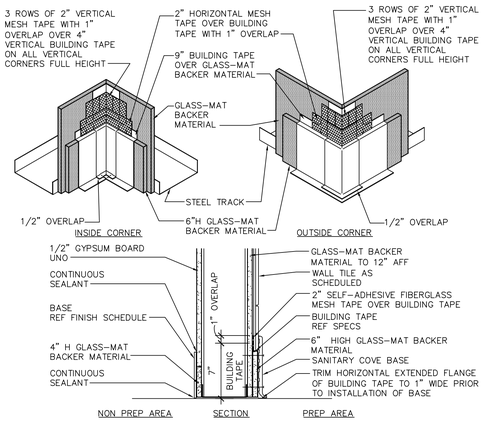

3 WALL DETAIL

1 1/2"=1'-0" 032610 C\ga040-012

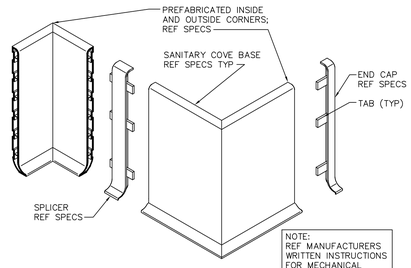

2 SANITARY COVE BASE ACCESSORY DETAILS

3"=1'-0" C\ga040-010

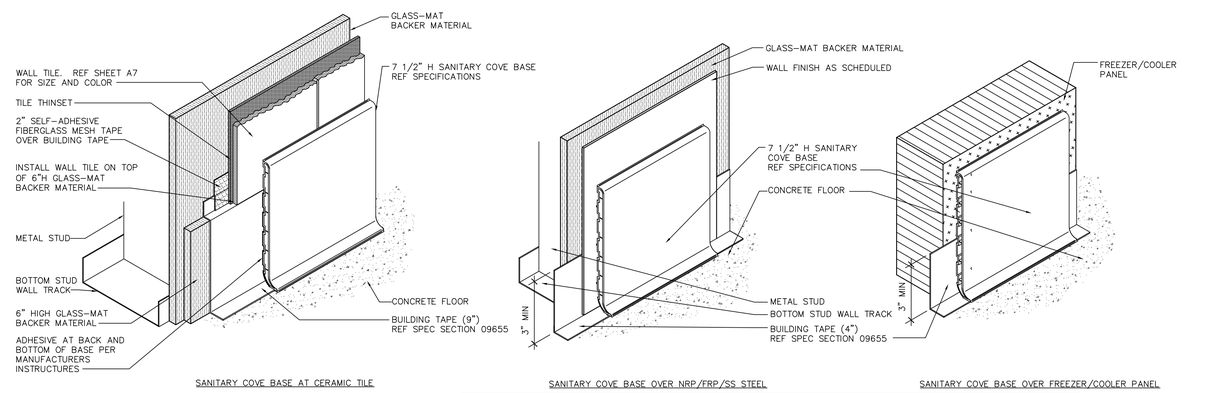

NOTES:
1. CONDITIONS SHOWN ARE FOR NEW CONSTRUCTION. PARTITION AND SUBSTRATE ABOVE 12" AFF MAY VARY AT EXISTING PARTITIONS.
2. TRIM EXCESS BUILDING TAPE FROM PROJECTING HORIZONTAL FLAP PRIOR TO INSTALLATION OF BASE.
3. REF 2,3-A3.1 FOR ADDITIONAL INFORMATION AT INSIDE AND OUTSIDE CORNERS.
4. GC TO PROVIDE MECHANICAL FASTENERS PER MANUFACTURERS WRITTEN INSTRUCTIONS.
5. USE ACCESSORIES PROVIDED AND INSTALL SANITARY COVE BASE PER MANUFACTURERS INSTRUCTIONS.

1 SANITARY COVE BASE DETAILS

3"=1'-0" 121809 C\ga040-011

CYNTERGY
CYNTERGY ARCHITECTURE, PLLC
810 S CINCINNATI
SECOND FLOOR
TULSA, OK 74119
918.877.6000
www.cyntergy.com

STIPULATION FOR REUSE

THIS DRAWING WAS PREPARED FOR USE ON A SPECIFIC SITE AT FORT WORTH, TX CONTEMPORANEOUSLY WITH ITS ISSUE DATE ON 02/12/18, AND IT IS NOT SUITABLE FOR USE ON A DIFFERENT PROJECT SITE OR AT A LATER TIME. USE OF THIS DRAWING FOR REFERENCE OR EXAMPLE ON ANOTHER PROJECT REQUIRES THE SERVICES OF PROPERLY LICENSED ARCHITECTS AND ENGINEERS. REPRODUCTION OF THIS DRAWING FOR REUSE ON ANOTHER PROJECT IS NOT AUTHORIZED AND MAY BE CONTRARY TO THE LAW.

Walmart Neighborhood Market
FORT WORTH, TX
STORE NO.2979-211
JOB NUMBER: USNR-006304 GENERAL REMODEL

ISSUE BLOCK

	02/12/18	PERMIT/ BID
30 X 42	SHEET SET	

CHECKED BY:	JO
DRAWN BY:	TB
PROTO:	52
PROTO CYCLE:	12/29/17
DOCUMENT DATE:	02/12/18

DOCUMENTS WITHOUT SIGNATURE AND REQUIRED SEAL OF AOR/EOR ARE NOT FOR CONSTRUCTION

JAMES EDWARD TURNER
ARCHITECT OF RECORD

SECTIONS AND DETAILS

SHEET:
A3.1

Feb 12, 2018 - 8:42am - USER tbillie
W:\Suprctrs\2018 Remodels\2979-211 Fort Worth TX\Drawings\0115 - A3.1 SECTIONS AND DETAILS - 2979.dwg