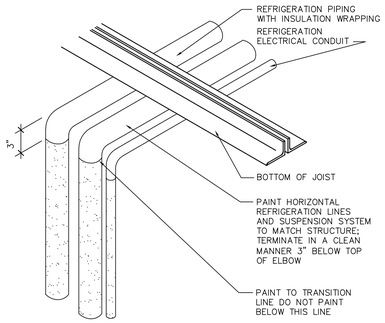

6 REFRIGERATION DROP LINES
1 1/2"=1'-0"

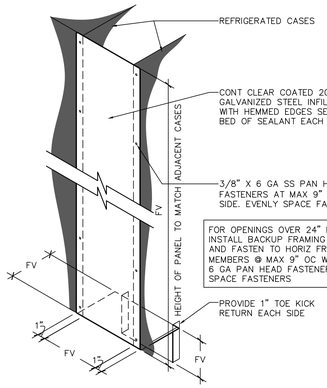

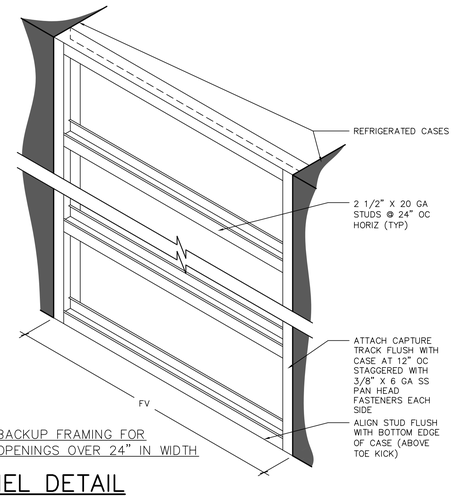

BACKUP FRAMING FOR OPENINGS OVER 24" IN WIDTH

5 CLOSURE PANEL DETAIL
1 1/2"=1'-0"

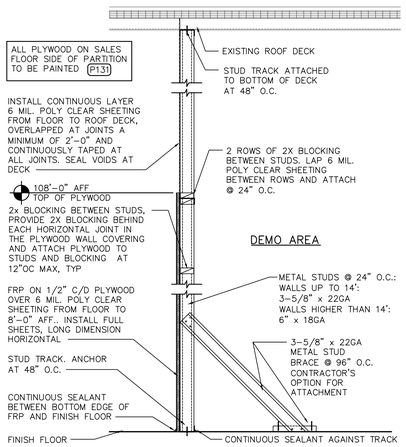

NOTE: TYPICAL WHERE UTILITY TRENCHES ARE CUT IN FLOORS OF FOOD AREAS WITHOUT CEILINGS / NOT ON AN EXTERIOR WALL

4 TEMPORARY FRP CLAD TRENCH BARRIER / DUST DRAPE
3/4"=1'-0" 112015 D1-08

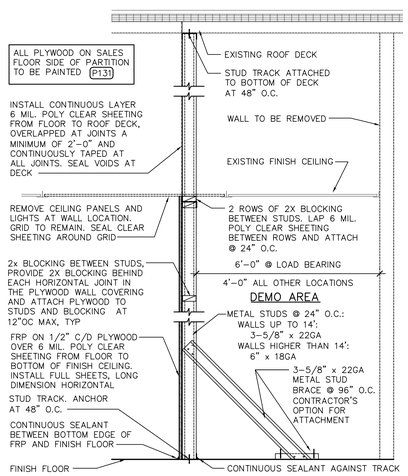

NOTE: TYPICAL AT FOOD AREAS WITH CEILINGS / NOT ON AN EXTERIOR WALL

3 TEMPORARY FRP CLAD BARRIER / DUST DRAPE
3/4"=1'-0" 112015 D1-09

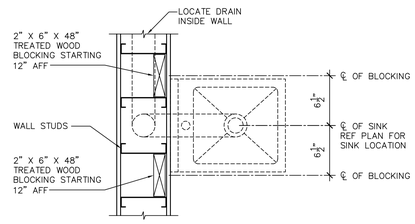

2 BLOCKING AT WALL MOUNTED HAND SINK
1 1/2" = 1'-0"

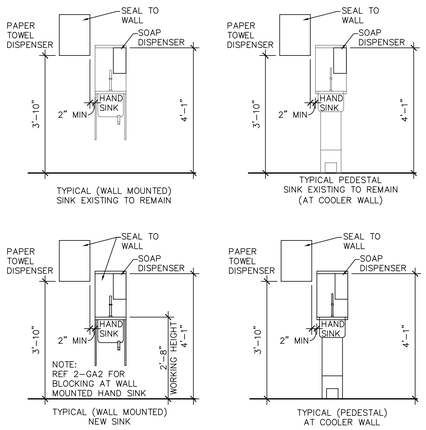

1 HAND SINK ELEVATION
1/2"=1'-0"

CYNTERGY
CYNTERGY ARCHITECTURE, PLLC
810 S CINCINNATI
SECOND FLOOR
TULSA, OK 74119
918.877.6000
www.cyntergy.com

STIPULATION FOR REUSE

THIS DRAWING WAS PREPARED FOR USE ON A SPECIFIC SITE AT FORT WORTH, TX CONTEMPORANEOUSLY WITH ITS ISSUE DATE ON 02/12/18, AND IT IS NOT SUITABLE FOR USE ON A DIFFERENT PROJECT SITE OR AT A LATER TIME. USE OF THIS DRAWING FOR REFERENCE OR EXAMPLE ON ANOTHER PROJECT REQUIRES THE SERVICES OF PROPERLY LICENSED ARCHITECTS AND ENGINEERS. REPRODUCTION OF THIS DRAWING FOR REUSE ON ANOTHER PROJECT IS NOT AUTHORIZED AND MAY BE CONTRARY TO THE LAW.

Walmart Neighborhood Market
FORT WORTH, TX
STORE NO.2979-211
JOB NUMBER: USMR-006304 | GENERAL REMODEL

ISSUE BLOCK

	02/12/18	PERMIT/ BID
30 X 42		SHEET SET

CHECKED BY:	JO
DRAWN BY:	TB
PROTO:	52
PROTO CYCLE:	12/29/17
DOCUMENT DATE:	02/12/18

DOCUMENTS WITHOUT SIGNATURE AND REQUIRED SEAL OF AOR/EOR ARE NOT FOR CONSTRUCTION

JAMES EDWARD TURNER
ARCHITECT OF RECORD

GROCERY DETAILS

SHEET:
GA2

Feb 12, 2018 - 8:43am - USER tbilbe
W:\Supretra\2018 Remodels\2979-211 Fort Worth TX\Drawings\GA30 - GA2 GROCERY DETAILS - 2979.dwg