GENERAL:
1. THE STRUCTURAL DESIGN IS BASED ON THE DESIGN REQUIREMENTS OF THE 2015 INTERNATIONAL BUILDING CODE.
2. ROOF DESIGN LOADS

LIVE LOAD		
ROOF	20	PSF
SNOW LOADS AND COEFFICIENTS		
GROUND SNOW	5	PSF
FLAT-ROOF SNOW LOAD	5	PSF
SNOW EXPOSURE FACTOR	1.0	
THERMAL FACTOR	1.0	
SNOW IMPORTANCE FACTOR	1.0	

3. LATERAL LOADS

WIND LOADS AND COEFFICIENTS		
ULTIMATE DESIGN WIND SPEED	115	MPH
NOMINAL DESIGN WIND SPEED	90	MPH
EXPOSURE CATEGORY	C	
RISK CATEGORY	II	
ENCLOSURE CLASSIFICATION	ENCLOSED	
SEISMIC DESIGN		
SEISMIC IMPORTANCE FACTOR	1.0	
RISK CATEGORY	II	
SPECTRAL RESPONSE ACCELERATION		
S_S	0.093	
S_1	0.050	
SPECTRAL RESPONSE COEFFICIENTS		
S_{DS}	0.100	
S_{D1}	0.080	
SITE CLASS	D	
SEISMIC DESIGN CATEGORY	B	

4. CONTRACTOR IS RESPONSIBLE FOR PROVIDING ADEQUATE TEMPORARY SUPPORT AND STABILITY OF EXISTING STRUCTURE DURING ALL PHASES OF CONSTRUCTION.
5. COORDINATE ALL DIMENSIONS WITH FLOOR PLAN; NOTIFY THE ARCHITECT/ENGINEER OF ANY CONFLICTS PRIOR TO CONSTRUCTION.
6. VERIFY ALL CONDITIONS, EXISTING AND NEW, SHOWN ON THE CONSTRUCTION DOCUMENTS PRIOR TO PROCEEDING WITH WORK. DISCREPANCIES SHALL BE BROUGHT TO THE ATTENTION OF THE ARCHITECT OR ENGINEER IN WRITTEN FORM. THE ARCHITECT/ENGINEER SHALL NOT BE RESPONSIBLE FOR WORK DONE IN THESE AREAS WITHOUT CLARIFICATION IN WRITING FROM THE ARCHITECT/ENGINEER.
7. ALL PHASES OF CONSTRUCTION SHALL CONFORM TO THE MINIMUM STANDARDS OF THE BUILDING CODE(S) NOTED IN "DESIGN CRITERIA".
8. DIMENSIONS SHOWN ON CONSTRUCTION DOCUMENTS TAKE PRIORITY OVER SCALED DIMENSIONS. IN SOME CASES PLANS AND DETAILS MAY NOT BE DRAWN TO SCALE FOR CLARITY.
9. DETAILS LABELED "TYPICAL" ON THESE DRAWINGS APPLY TO SITUATIONS OCCURRING ON THE PROJECT THAT ARE THE SAME OR SIMILAR TO THOSE SPECIFICALLY DETAILED. SUCH DETAILS APPLY WHETHER OR NOT DETAILS ARE REFERENCED AT EACH LOCATION. NOTIFY ENGINEER OF ANY CONDITIONS NOT APPLICABLE TO THESE "TYPICAL" DETAILS.
10. DO NOT LOAD THE CONCRETE SLAB ON GRADE WITH ERECTION EQUIPMENT. THE SLABS HAVE NOT BEEN DESIGNED FOR ERECTION EQUIPMENT LOADS. SHOULD THE CONTRACTOR REQUIRE ERECTION EQUIPMENT TO BE PLACED ON SLAB ON GRADE, THE CONTRACTOR SHALL BE RESPONSIBLE FOR THE DESIGN OF THE SLAB IN THE AFFECTED AREAS.
11. DO NOT STACK CONSTRUCTION MATERIALS ON FLOORS OR ROOFS DURING CONSTRUCTION IN EXCESS OF 80 PERCENT OF THE DESIGN LIVE LOAD NOTED ON THESE PLANS.
12. PRIOR TO SUBSTITUTING MANUFACTURED OR PRE-ENGINEERED PRODUCTS INDICATED IN CONSTRUCTION DOCUMENTS, APPROVAL FROM THE ARCHITECT/ENGINEER IS REQUIRED. ALL NECESSARY INFORMATION REQUIRED FOR THE PROFESSIONAL TO DETERMINE THE EQUIVALENCY OF THE SUBSTITUTED PRODUCT SUCH AS ICC EVALUATION REPORTS, ASTM REPORTS, ETC. SHALL BE PROVIDED. THE ARCHITECT/ENGINEER SHALL NOT BEAR THE COSTS OF SUCH REVIEWS.
13. CONTRACTOR IS RESPONSIBLE FOR MEANS AND METHODS OF CONSTRUCTION, AS WELL AS SEQUENCE OF CONSTRUCTION THAT DOES NOT IMPACT THE FINAL DESIGN AS SHOWN ON CONSTRUCTION DOCUMENTS.
14. MECHANICAL UNITS AND OTHER SYSTEMS SHOWN ON THE STRUCTURAL PLANS INDICATE A SPECIFIC WEIGHT AND LOCATION. SHOULD THE CONTRACTOR INSTALL UNITS WITH DIFFERENT WEIGHTS OR LOCATIONS AS SHOWN THEY SHALL PROVIDE THIS INFORMATION TO ARCHITECT/ENGINEER FOR APPROVAL PRIOR TO INSTALLATION.
15. CONTRACTOR IS RESPONSIBLE FOR PROTECTING THE EXISTING BUILDING DURING CONSTRUCTION.

SLABS-ON-GRADE:
1. CONCRETE SLABS-ON-GRADE SHALL BEAR ON A 6 INCH AGGREGATE BASE CONFORMING TO TXDOT SPECIFICATIONS.
2. CONTRACTOR SHALL PROVIDE TEMPORARY SHORING FOR FOUNDATION WALLS RETAINING BACKFILL UNTIL THE CONCRETE SLAB-ON-GRADE IS IN PLACE AND THE CONCRETE HAS REACHED IT'S FULL 28 DAY STRENGTH.
3. CONTRACTOR SHALL INSTALL ALL UNDERSLAB PIPING AND ELECTRICAL WORK AND RECOMPACT ANY DISTURBED STRUCTURAL FILL BEFORE INSTALLATION OF SLAB.
4. THE SIZE AND LOCATION OF ALL EQUIPMENT PADS AND PENETRATION THROUGH FOUNDATION SHALL BE VERIFIED BY THE MECHANICAL, ELECTRICAL AND PLUMBING CONTRACTORS. ALL PENETRATIONS SHALL BE SUBJECT TO APPROVAL BY THE ARCHITECT/ENGINEER.
5. THE BASE OF ALL FOOTING EXCAVATIONS SHALL BE FREE OF ALL WATER AND LOOSE SOIL PRIOR TO CONCRETE PLACEMENT. THE CONCRETE SHALL BE PLACED AS SOON AS POSSIBLE AFTER EXCAVATION SO THAT EXCESSIVE DRYING OF THE BEARING MATERIALS DOES NOT OCCUR.

CONCRETE:
1. MINIMUM COMPRESSIVE STRENGTH (f'c) AT THE END OF 28 DAYS SHALL BE 4000 PSI.
2. CALCIUM CHLORIDE IS NOT TO BE USED AS AN ADMIXTURE.
3. REINFORCING BARS AND OTHER CONCRETE INSERTS SHALL BE WELL SECURED IN POSITION PRIOR TO PLACEMENT OF CONCRETE. STABBING OF REINFORCING BARS AND OTHER CONCRETE INSERTS IS NOT ALLOWED.
4. COORDINATE WITH OTHER TRADES TO ENSURE THE PROPER PLACEMENT OF OPENINGS, SLEEVES, CURBS, INSERTS, DEPRESSIONS, ETC. AS SHOWN ON CONSTRUCTION DOCUMENTS.
5. CONCRETE EXPOSED TO WEATHER IN AREAS SUBJECT TO FROST SHALL BE AIR-ENTRAINED WITH AN AIR CONTENT BETWEEN 4 AND 6 PERCENT.
6. FOR PLACEMENT OF CONCRETE IN EITHER HOT OR COLD WEATHER CONDITIONS FOLLOW ACI STANDARD PROCEDURES.
7. "C.J." INDICATES SAWCUT CONTRACTION JOINT. "CONST. JOINT" INDICATES PREFERRED LOCATIONS FOR CONSTRUCTION JOINTS. IF A CONSTRUCTION JOINT IS NOT REQUIRED BY THE CONTRACTOR, A SAWCUT CONTRACTION JOINT MAY BE SUBSTITUTED AT THOSE LOCATIONS.
8. EPOXY GROUT OR ADHESIVE SHALL BE HILTI HIT-HY 200 SAFE SET ADHESIVE SYSTEM, UNLESS NOTED OTHERWISE.

REINFORCING STEEL:
1. ALL REINFORCING STEEL AND SUPPORTS SHALL BE DESIGNED, DETAILED, FABRICATED AND PLACED IN ACCORDANCE WITH ACI 318 AND ACI 315.
2. ALL REINFORCING BARS SHALL BE IN ACCORDANCE WITH ASTM A615 GRADE 60.
3. WELDED WIRE REINFORCEMENT SHALL BE NEW BILLET STEEL, COLD DRAWN CONFORMING TO THE ASTM SPECIFICATION A185 AND A82. LAP WELDED WIRE REINFORCEMENT A MINIMUM OF 12".
4. ALL CONCRETE SLAB ON GRADE, RAISED CONCRETE SLAB, AND MAT REINFORCING SHALL BE SUPPORTED ON BOLSTERS OR BRICK SPACED NO FURTHER THAN 4 FEET ON CENTER.
5. ALL REINFORCING SHALL BE COLD BENT.
6. PROVIDE CLASS B SPLICES IN REINFORCING FOR CONTINUOUS REINFORCING. PROVIDE STANDARD 90 DEGREE HOOKS IN ACCORDANCE WITH ACI 318 UNLESS SPECIFICALLY DETAILED. REFER TO CONSTRUCTION DOCUMENTS FOR REQUIRED LAP LENGTHS. PROVIDE CONTINUOUS HORIZONTAL WALL AND CONTINUOUS FOOTING REINFORCEMENT WITH 90 DEGREE BENDS AT CORNERS AND INTERSECTIONS AS SHOWN ON CONSTRUCTION DOCUMENTS.
7. MAINTAIN THE FOLLOWING REINFORCEMENT COVERAGE FOR REINFORCING STEEL UNLESS NOTED OTHERWISE.

CONCRETE CAST AGAINST SOIL:		3 INCHES
CONCRETE EXPOSED TO WEATHER:	NO. 6 AND LARGER	2 INCHES
	NO. 5 AND SMALLER	1½ INCHES
CONCRETE NOT EXPOSED TO WEATHER OR IN CONTACT WITH SOIL	NO. 11 AND SMALLER	1 INCH WALL
		1½ INCH SLAB

TESTS AND INSPECTIONS:
1. SPECIAL TESTS AND INSPECTIONS: ENGAGE A QUALIFIED TESTING AGENCY AND SPECIAL INSPECTOR TO CONDUCT SPECIAL TESTS AND INSPECTIONS REQUIRED BY AUTHORITIES HAVING JURISDICTION, AS INDICATED ON CONTRACT DOCUMENTS.
2. SPECIAL TESTS AND INSPECTIONS: CONDUCTED BY A QUALIFIED TESTING AGENCY AND SPECIAL INSPECTOR AS REQUIRED BY AUTHORITIES HAVING JURISDICTION AND AS FOLLOWS:
   - 2.1. VERIFYING THAT MANUFACTURER MAINTAINS DETAILED FABRICATION AND QUALITY-CONTROL PROCEDURES AND REVIEWING THE COMPLETENESS AND ADEQUACY OF THOSE PROCEDURES TO PERFORM THE WORK.
   - 2.2. NOTIFYING ENGINEER AND CONTRACTOR PROMPTLY OF IRREGULARITIES AND DEFICIENCIES OBSERVED IN THE WORK DURING THE PERFORMANCE OF ITS SERVICE.
   - 2.3. SUBMITTING A CERTIFIED WRITTEN REPORT OF EACH TEST, INSPECTION AND SIMILAR QUALITY-CONTROL SERVICE TO ENGINEER WITH COPY TO CONTRACTOR AND TO AUTHORITIES HAVING JURISDICTION.
   - 2.4. SUBMITTING A FINAL REPORT OF SPECIAL TESTS AND INSPECTIONS AT SUBSTANTIAL COMPLETION, WHICH INCLUDES A LIST OF UNRESOLVED DEFICIENCIES.
   - 2.5. INTERPRETING TESTS AND INSPECTIONS AND STATING IN EACH REPORT WHETHER TESTED AND INSPECTED WORK COMPLIES WITH OR DEVIATES FROM THE CONTRACT DOCUMENTS.
   - 2.6. RE-TESTING AND RE-INSPECTING CORRECTED WORK.
3. ALL MATERIALS FOR CONCRETE (CEMENT, AGGREGATE, REBAR, ETC.) SHALL BE TESTED FROM STOCK. COPIES OR CERTIFICATIONS TO MEET SPECIFICATION REQUIREMENTS SHALL BE SUPPLIED UPON REQUEST BY THE CONTRACTING OFFICER'S REPRESENTATIVE.
4. REFER TO SPECIFICATIONS FOR INSPECTION AND TESTING REQUIREMENTS FOR EACH MATERIAL (MASONRY, CONCRETE, STEEL, ETC.). ALL TESTS SHALL BE PER ASTM STANDARDS.
5. SPECIAL INSPECTIONS ARE REQUIRED FOR BUILDING CODE(S) NOTED IN "DESIGN CRITERIA". REFER TO "SPECIAL INSPECTIONS REQUIRED" TABLE PROVIDED ON THIS SHEET.
6. COMPACTION FOR FILL BENEATH SLABS SHALL BE TESTED AT EACH LIFT WITH MINIMUM THREE TESTS PER 2,000 SQUARE FEET.
7. THE CONTRACTOR SHALL NOTIFY THE SPECIAL INSPECTOR WHEN WORK IS READY FOR INSPECTION AND SHALL PROVIDE ACCESS FOR INSPECTIONS AND TESTING

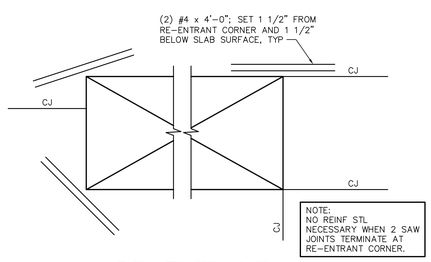

4 RE-ENTRANT CORNER REINFORCING
NTS

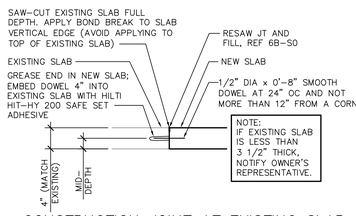

6C CONSTRUCTION JOINT AT EXISTING SLAB

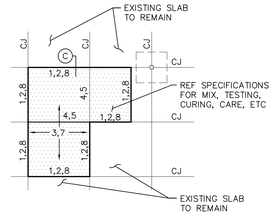

GENERIC SLAB KEY PLAN

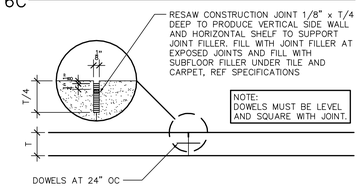

6B CONSTRUCTION JOINT (CONST JOINT)

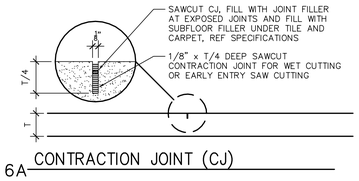

6A CONTRACTION JOINT (CJ)

1. SAW CUT EXISTING SLAB FULL DEPTH AT PERIMETER OF SLAB SECTION TO BE REPLACED.
2. EMBED SMOOTH DOWELS 4" INTO EXISTING CONCRETE SLAB, REFERENCE ADJACENT DETAILS. GREASE END IN NEW SLAB. USE TORPEDO LEVEL AND CARPENTER'S SQUARE TO INSURE DOWELS ARE ALIGNED LEVEL AND PERPENDICULAR TO EXISTING SLAB EDGE.
3. REF SPECS FOR SUBGRADE AND COMPACTION REQUIREMENTS. SURFACE OF SUBGRADE AFTER COMPACTION SHALL BE DRY, SMOOTH, FLAT AND DENSE.
4. REPLACEMENT SLAB SAW JOINT, REF PARTIAL SLAB PLANS FOR LOCATIONS. REPLACE CONCRETE TO MATCH ADJACENT FINISH, JOINTS AND DETAILING, REF SPECS. REF SPECS FOR CURING INFORMATION.
5. INSTALL DOWELS AT CONSTRUCTION JOINTS BETWEEN ADJACENT NEW REPLACEMENT SLABS AS REQD, REF 6B-S0. DOWELS NOT REQUIRED AT SAW JOINTS.
6. CONTRACTOR SHALL HAVE PRE-SLAB INSTALLATION MEETING PRIOR TO FIRST CONCRETE SLAB PLACEMENT, REF SPECS.
7. IF EXISTING SLAB HAS A CONTINUOUS VAPOR BARRIER OR IF NEW SLAB IS TO RECEIVE EPOXY RESIN TOP COAT, INSTALL VAPOR BARRIER UNDER SLAB BEING REPLACED. TURN BARRIER UP AT FACE OF EXISTING CONCRETE TO REMAIN AND ATTACH USING FULL SEALANT BED PRIOR TO PLACING CONCRETE.
8. AVOID SPALLING EDGES OF JOINTS WHEN RESAWING AFTER CONCRETE PLACEMENT. DAMAGED (SPALLED) CONCRETE SHALL BE REMOVED TO THE NEXT ALLOWABLE INCREMENT AND REPLACED AT THE CONTRACTOR'S EXPENSE, WITH NO EXTENSION OF THE CONSTRUCTION SCHEDULE.

6 SLAB REPLACEMENT DETAILS
3/4"=1'-0"

SPECIAL INSPECTIONS REQUIRED TABLE

PERIODIC SPECIAL INSPECTIONS:

CONCRETE
1. INSPECTION OF REINFORCING STEEL AND PLACEMENT
2. INSPECT BOLTS TO BE INSTALLED IN CONCRETE PRIOR TO AND DURING PLACEMENT OF CONCRETE WHERE ALLOWABLE LOADS HAVE BEEN INCREASED
3. VERIFYING USE OF REQUIRED MIX DESIGNS
4. INSPECTION FOR MAINTENANCE OF SPECIFIED CURING TEMPERATURE AND TECHNIQUES
5. INSPECT FORMWORK FOR SHAPE, LOCATION AND DIMENSIONS OF THE CONCRETE MEMBER BEING FORMED

SOILS
1. VERIFY EXCAVATIONS ARE EXTENDED TO PROPER DEPTH AND HAVE REACHED PROPER MATERIAL
2. PERFORM CLASSIFICATION AND TESTING OF CONTROLLED FILL MATERIALS
3. PRIOR TO PLACEMENT OF CONTROLLED FILL, OBSERVE SUBGRADE AND VERIFY THAT SITE HAS BEEN PREPARED PROPERLY

CONTINUOUS SPECIAL INSPECTIONS:

CONCRETE
1. INSPECT BOLTS TO BE INSTALLED IN CONCRETE PRIOR TO AND DURING PLACEMENT OF CONCRETE
2. SAMPLE FRESH CONCRETE FOR STRENGTH TESTS AND PERFORM SLUMP AND AIR CONTENT TESTS. DETERMINE THE TEMPERATURE OF FRESH CONCRETE AT THE TIME SPECIMENS ARE MADE FOR STRENGTH TEST
3. INSPECTION OF CONCRETE PLACEMENT FOR PROPER APPLICATION TECHNIQUES

SOILS
1. VERIFY USE OF PROPER MATERIALS, DENSITIES AND LIFT THICKNESSES DURING PLACEMENT AND COMPACTION OF CONTROLLED FILL

POST-INSTALLED ANCHOR
1. CONTINUOUS INSPECTION OF ALL POST-INSTALLED ANCHORS.
   A. FOR HILTI HIT-HY 200 SAFE SET SYSTEM IN CONCRETE, INSTALL PER ICC REPORT ESR-3187

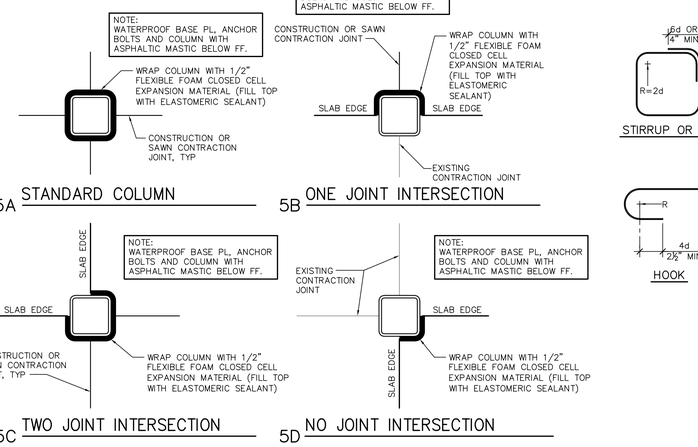

5A STANDARD COLUMN
5B ONE JOINT INTERSECTION
5C TWO JOINT INTERSECTION
5D NO JOINT INTERSECTION

5 COLUMN ISOLATION WRAP
1"=1'-0"

ABBREVIATION LEGEND

NOT ALL ABBREVIATIONS USED ON DRAWINGS

ABBR	DEFINITION	ABBR	DEFINITION
AB	ANCHOR BOLT	JST	JOIST
ACI	AMERICAN CONCRETE INSTITUTE	JT	JOINT
AFF	ABOVE FINISHED FLOOR	KSI	KIPS PER SQUARE INCH
AISC	AMERICAN INSTITUTE OF STEEL CONSTRUCTION	LB	POUNDS
AISI	AMERICAN IRON AND STEEL INSTITUTE	LLH	LONG LEG HORIZONTAL
ARCH	ARCHITECTURAL	LLV	LONG LEG VERTICAL
ASTM	AMERICAN SOCIETY FOR TESTING AND MATERIALS	LONG	LONGITUDINAL
AWS	AMERICAN WELDING SOCIETY	MATL	MATERIAL
BFF	BELOW FINISHED FLOOR	MAX	MAXIMUM
BL	BLOCK LINTEL	MECH	MECHANICAL
BM	BEAM	MFR	MANUFACTURER
BO	BOTTOM OF	MIN	MINIMUM
BOS	BOTTOM OF STEEL	MISC	MISCELLANEOUS
BOT	BOTTOM	MTL	METAL
BRG	BEARING	NS	NEAR SIDE
BTWN	BETWEEN	NTS	NOT TO SCALE
CJ	CONTROL JOINT	OC	ON CENTER
CL	CENTER LINE	OD	OUTSIDE DIAMETER
CLR	CLEAR	OH	OPPOSITE HAND
CMU	CONCRETE MASONRY UNIT	OPNG	OPENING
COL	COLUMN	PAF	POWDER ACTUATED FASTENER
CONC	CONCRETE	PCF	POUNDS PER CUBIC FOOT
CONN	CONNECTION	PL	PLATE
CONST	CONSTRUCTION	PLF	POUNDS PER LINEAR FOOT
CONT	CONTINUOUS	PSF	POUNDS PER SQUARE FOOT
DIA	DIAMETER	PSI	POUNDS PER SQUARE INCH
EA	EACH	REF	REFER TO
EJ	EXPANSION JOINT	REINF	REINFORCING
EL	ELEVATION	REQD	REQUIRED
ELEC	ELECTRICAL	ROT	ROTATE
EQ	EQUAL	RTU	ROOF TOP UNIT
EW	EACH WAY	SCHED	SCHEDULE
FDN	FOUNDATION	SDI	STEEL DECK INSTITUTE
FF	FINISHED FLOOR	SIM	SIMILAR
FS	FAR SIDE	SJI	STEEL JOIST INSTITUTE
FTG	FOOTING	SPECS	SPECIFICATIONS
GC	GENERAL CONTRACTOR	STL	STEEL
GYP BD	GYPSUM BOARD	STRUC	STRUCTURAL
HORIZ	HORIZONTAL	T&B	TOP AND BOTTOM
HSA	HEADED STUD ANCHOR	THK	THICKNESS
HSS	HOLLOW STRUCTURAL SHAPE	TO	TOP OF
INFO	INFORMATION	TOS	TOP OF STEEL
ISO	ISOLATION	TYP	TYPICAL
JBE	JOIST BEARING ELEVATION	UNO	UNLESS NOTED OTHERWISE

4000 PSI CONCRETE REINFORCING LAP SPLICE AND 90 DEGREE HOOK LENGTHS SCHEDULE

SIZE	TYP LAP LENGTH(IN)	OTHER LAP LENGTH(IN)*	MIN EMBEDMENT FOR STD 90 DEG HOOK(IN)
#3	19	28	8
#4	25	37	10
#5	31	47	12
#6	37	56	15
#7	54	81	17
#8	62	93	19
#9	70	105	22

* REFERS TO REINFORCING WITHOUT ADEQUATE COVER OR PLACED CLOSER TOGETHER THAN 2 BAR DIAMETERS.

R= 4d FOR #8 BARS OR SMALLER
R= 5d FOR #9, #10 AND #11 BARS
R= 6d FOR #14 AND #18 BARS

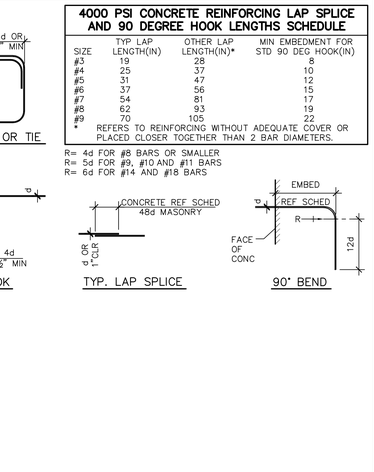

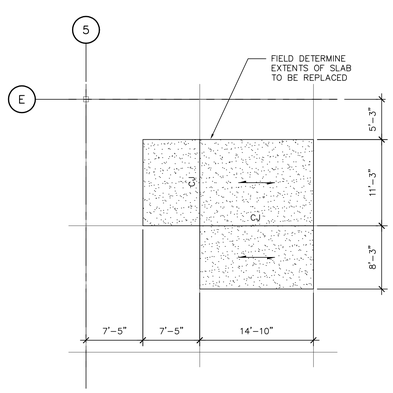

NOTE: SLAB IS UNREINFORCED, UNO.

REF D1 FOR SLAB DEMOLITION INFO. REF 6-S0 FOR CJ DETAIL AND ADDITIONAL INFORMATION, 4-S0 FOR RE-ENTRANT CORNER DETAIL AND 5-S0 FOR COLUMN ISOLATION WRAP INFORMATION.

PROVIDE #4 AT 12" OC IN LONG DIRECTION OF SLAB; PLACE REINF 2" BELOW TOP OF SLAB; STOP REINF 6" SHORT OF SAW JOINTS

3 SLAB REPLACEMENT PLAN
1/8"=1'-0"

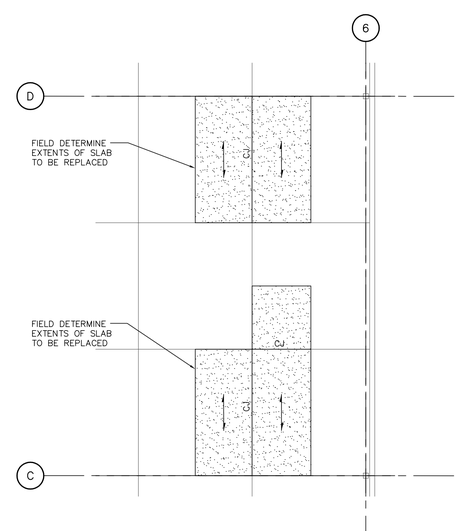

NOTE: SLAB IS UNREINFORCED, UNO.

REF D1 FOR SLAB DEMOLITION INFO. REF 6-S0 FOR CJ DETAIL AND ADDITIONAL INFORMATION, 4-S0 FOR RE-ENTRANT CORNER DETAIL AND 5-S0 FOR COLUMN ISOLATION WRAP INFORMATION.

PROVIDE #4 AT 12" OC IN LONG DIRECTION OF SLAB; PLACE REINF 2" BELOW TOP OF SLAB; STOP REINF 6" SHORT OF SAW JOINTS

2 SLAB REPLACEMENT PLAN
1/8"=1'-0"

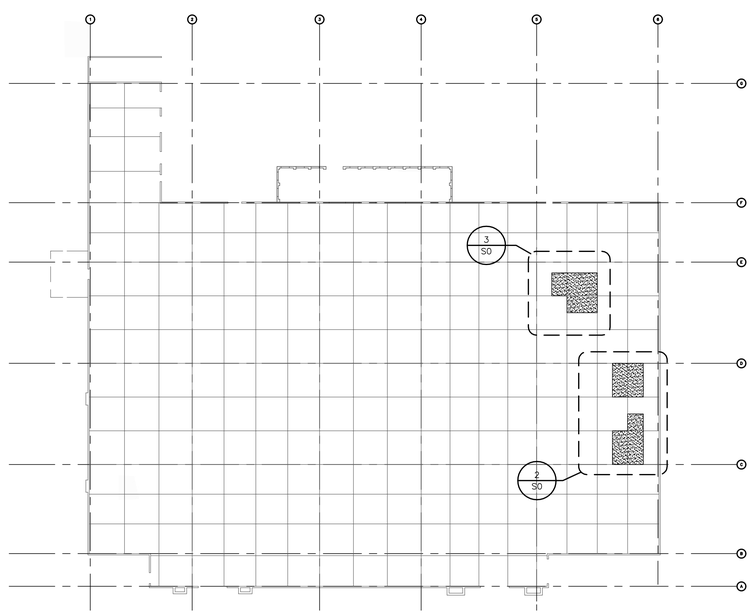

1 KEY PLAN
NTS

CYNTERGY
CYNTERGY ENGINEERING, PLLC
810 S CINCINNATI
SECOND FLOOR
TULSA, OK 74119
918.877.6000
www.cyntergy.com

STIPULATION FOR REUSE

THIS DRAWING WAS PREPARED FOR USE ON A SPECIFIC SITE AT FORT WORTH, TX CONTEMPORANEOUSLY WITH ITS ISSUE DATE ON 02/12/18, AND IT IS NOT SUITABLE FOR USE ON A DIFFERENT PROJECT SITE OR AT A LATER TIME. USE OF THIS DRAWING FOR REFERENCE OR EXAMPLE ON ANOTHER PROJECT REQUIRES THE SERVICES OF PROPERLY LICENSED ARCHITECTS AND ENGINEERS. REPRODUCTION OF THIS DRAWING FOR REUSE ON ANOTHER PROJECT IS NOT AUTHORIZED AND MAY BE CONTRARY TO THE LAW.

Walmart Neighborhood Market
FORT WORTH, TX
STORE NO.2979-211
GENERAL REMODEL
JOB NUMBER: USMR-006304

ISSUE BLOCK

	02/12/18	PERMIT/ BID

30 X 42 SHEET SET

CHECKED BY:	LLV
DRAWN BY:	NW
PROTO:	52
PROTO CYCLE:	12/29/17
DOCUMENT DATE:	02/12/18

DOCUMENTS WITHOUT SIGNATURE AND REQUIRED SEAL OF AOR/EOR ARE NOT FOR CONSTRUCTION

LARRY L. VORBA
ENGINEER OF RECORD
CA # F-2220

GENERAL STRUCTURAL INFORMATION

SHEET: S0

Feb 08, 2018 - 8:09am - USER nwhite
W:\Suprctrs\2018 Remodels\2979-211 Fort Worth TX\Drawings\1000 - S0 GENERAL STRUCTURAL INFORMATION - 2979.dwg