PLUMBING SYMBOLS

—SS—	SANITARY SEWER
—GW—	GREASE WASTE
—OW—	OIL WASTE
—ST—	STORM SEWER
—RD—	ROOF DRAIN LINE
—ORD—	OVERFLOW ROOF DRAIN LINE
— - —	DOMESTIC COLD WATER
— - - —	DOMESTIC HOT WATER
— - - - —	DOMESTIC HOT WATER RETURN
—IW—	IRRIGATION WATER
—T—	TEPID OR TEMPERED WATER
—F—	FILTERED WATER
—G—	NATURAL GAS
—A—	COMPRESSED AIR
—CD—	CONDENSATE DRAIN
—RO—	REVERSE OSMOSIS WATER
—V—	PLUMBING VENT
—VAC—	PLUMBING VACUUM
	UNION
	GAS PRESSURE REGULATOR
	GAS COCK
	ELBOW – TURNED DOWN
	ELBOW – TURNED UP
	TEE – TURNED DOWN
	TEE – TURNED UP
	BALL VALVE
	FLOW CONTROL VALVE
	PLUG VALVE
	CHECK VALVE
	SHUT–OFF VALVE IN VERTICAL LINE
	BACKFLOW PREVENTER
M	WATER METER
WHA	WATER HAMMER ARRESTOR
	THERMOMETER
	T & P RELIEF VALVE
TMV	THERMOSTATIC MIXING VALVE
FD1	FLOOR DRAIN
	ROOF DRAIN/OVERFLOW ROOF DRAIN
FCO1	FLOOR CLEANOUT
FCO30	FLOOR CLEANOUT (SQUARE)
YCO	YARD CLEANOUT
FPWH	FREEZE PROOF WALL HYDRANT
HB	HOSE BIBB
WCO/CO	WALL CLEANOUT / CLEANOUT
	CONNECT TO EXISTING
ETR	EXISTING TO REMAIN
	DEMO PIPE
----VBF----	VENT BELOW FLOOR

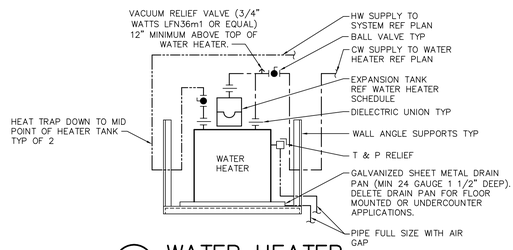

6 WATER HEATER
NTS 10.26.12 PLUMB2.1–2

NOTES:
1. INSTALLATION AND MATERIALS SHALL COMPLY WITH STATE AND LOCAL REGULATIONS.
2. INSTALL SHUTOFF VALVE IN AN ACCESSIBLE LOCATION.

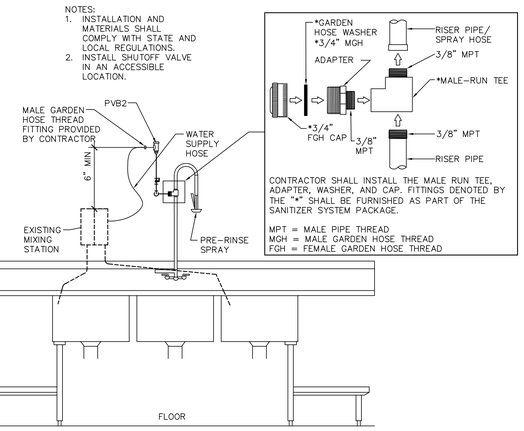

5 TRIPLE SINK ELEVATION
NTS 10.27.06 PLUMB2.1–9

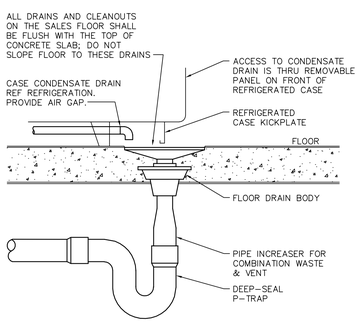

LOCATE FLOOR DRAIN WHERE SHOWN ON DIMENSIONED PLUMBING FLOOR PLAN

4 REFRIGERATED CASE DRAIN
NTS 04.28.06 PLUMB2–8

NOTES:
1. INSTALLATION AND MATERIALS SHALL COMPLY WITH STATE AND LOCAL REGULATIONS.
2. INSTALL SHUTOFF VALVE IN AN ACCESSIBLE LOCATION.

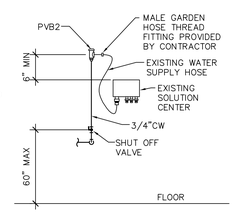

3 PRESSURE VACUUM BREAKER INSTALLATION
NTS 10.30.15 PLUMB2.5–5

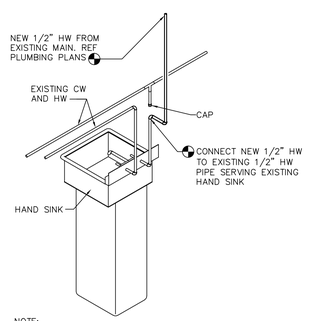

NOTE:
VERIFY SIZE AND LOCATION OF EXISTING DOMESTIC WATER SUPPLY PIPING AT SITE.

2 HAND SINK HW CONNECTION
NTS 12.20.13 PLUMB2.13–1

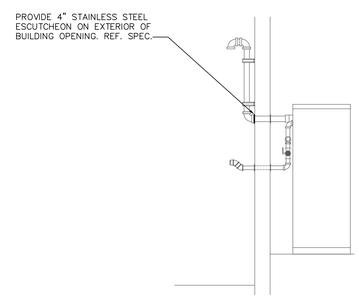

1 WASTE COOKING OIL TANK VENTING DETAIL
NTS 07.25.14 PLUMB2.3–2 CLEANSTAR – SEISMIC DESIGN CATEGORY A–C

CYNTERGY
CYNTERGY ENGINEERING, PLLC
810 S CINCINNATI
SECOND FLOOR
TULSA, OK 74119
918.877.6000
www.cyntergy.com

STIPULATION FOR REUSE
THIS DRAWING WAS PREPARED FOR USE ON A SPECIFIC SITE AT FORT WORTH, TX CONTEMPORANEOUSLY WITH ITS ISSUE DATE ON 02/12/18, AND IT IS NOT SUITABLE FOR USE ON A DIFFERENT PROJECT SITE OR AT A LATER TIME. USE OF THIS DRAWING FOR REFERENCE OR EXAMPLE ON ANOTHER PROJECT REQUIRES THE SERVICES OF PROPERLY LICENSED ARCHITECTS AND ENGINEERS. REPRODUCTION OF THIS DRAWING FOR REUSE ON ANOTHER PROJECT IS NOT AUTHORIZED AND MAY BE CONTRARY TO THE LAW.

Walmart Neighborhood Market
FORT WORTH, TX
STORE NO.2979–211
JOB NUMBER: USMR–006304 GENERAL REMODEL

ISSUE BLOCK

	02/12/18	PERMIT/ BID
	30 X 42	SHEET SET

CHECKED BY:	BJR
DRAWN BY:	JJB
PROTO:	52
PROTO CYCLE:	12/29/17
DOCUMENT DATE:	02/12/18

DOCUMENTS WITHOUT SIGNATURE AND REQUIRED SEAL OF AOR/EOR ARE NOT FOR CONSTRUCTION

JEFFERY DON FERGUSON, P.E.
ENGINEER OF RECORD
CA # F–2220

PLUMBING DETAILS

SHEET:
P2

Feb 09, 2018 – 11:28am – USER jblankenship
W:\Supretra\2018 Remodels\2979–211 Fort Worth TX\Drawings\3110 – P2 PLUMBING DETAILS – 2979.dwg