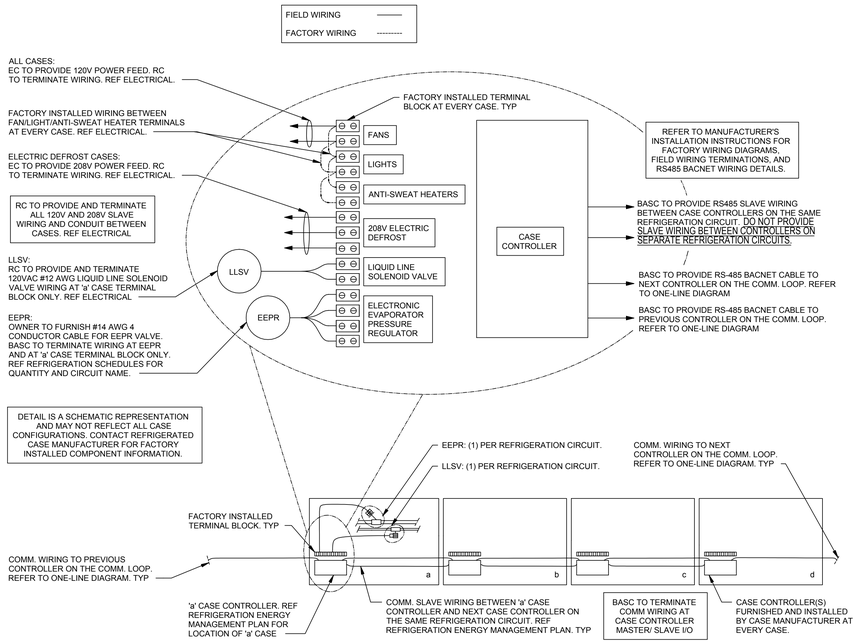


6 CASE CONNECTION SCHEMATIC
NTS

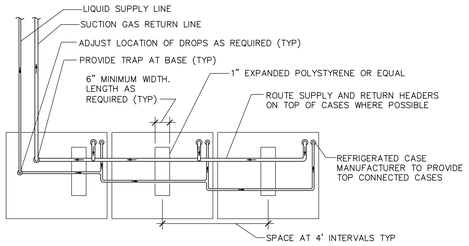


5 REFRIGERATION PIPE ROUTING FOR TOP FED CASES (INDV. CIRCUIT SYSTEM)
NTS 03.28.14 REFRIG2.1-9

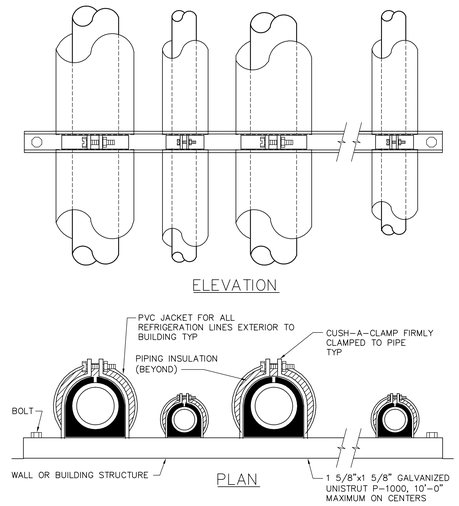


4 VERTICAL REFRIGERANT LINE SUPPORT
NTS 06.29.01 REFRIG-3

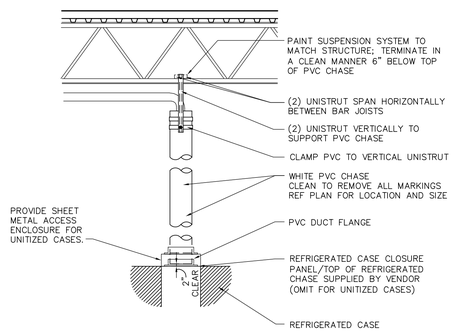


3 PVC REFRIGERATION CHASE
NTS REFRIG2.11 PVC CHASE SUPPORT

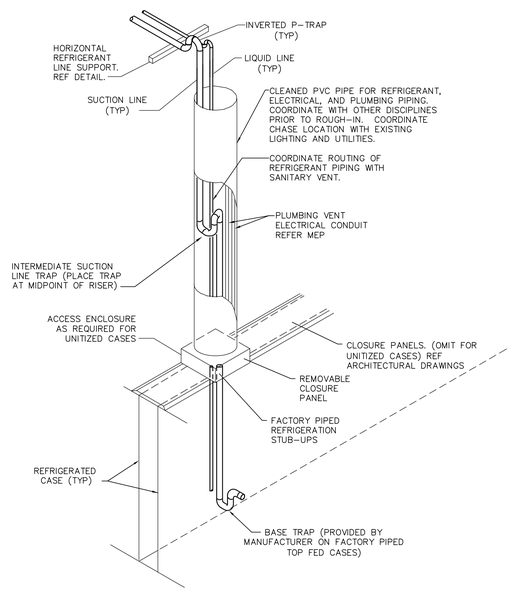


2 INTERMEDIATE SUCTION LINE TRAP WITH PVC CHASE
NTS 07.29.16 REFRIG2.1-8

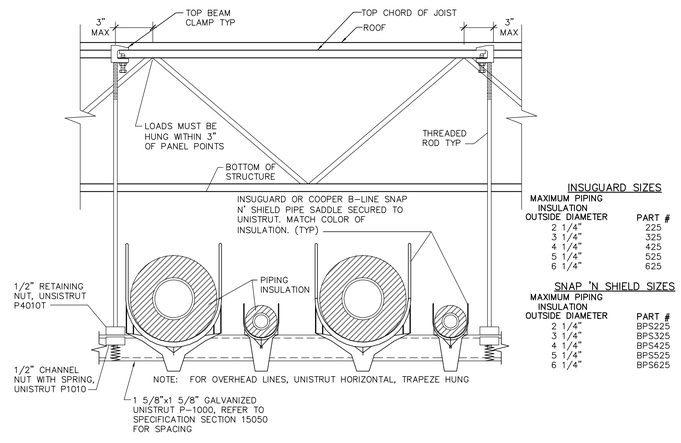


INSUGUARD SIZES

| MAXIMUM PIPING INSULATION OUTSIDE DIAMETER | PART # |
|---|---|
| 2 1/4" | 225 |
| 3 1/4" | 325 |
| 4 1/4" | 425 |
| 5 1/4" | 525 |
| 6 1/4" | 625 |

SNAP 'N SHIELD SIZES

| MAXIMUM PIPING INSULATION OUTSIDE DIAMETER | PART # |
|---|---|
| 2 1/4" | BPS225 |
| 3 1/4" | BPS325 |
| 4 1/4" | BPS425 |
| 5 1/4" | BPS525 |
| 6 1/4" | BPS625 |

1 HORIZONTAL REFRIGERANT LINE SUPPORT DETAIL
NTS 08.30.13 REFRIG-4

EXISTING CONDITIONS WERE TAKEN FROM ORIGINAL DRAWINGS AND MAY NOT REFLECT EXACT "AS-BUILT" CONDITIONS. CONTRACTOR SHALL FIELD VERIFY ALL EXISTING CONDITIONS PRIOR TO SUBMITTING FINAL BIDS. CONTRACTOR SHALL CAREFULLY COORDINATE NEW WORK AND DEMOLITION WITH ALL OTHER DISCIPLINES AND EXISTING CONDITIONS.

EACH SUBCONTRACTOR IS RESPONSIBLE FOR HAVING A THOROUGH KNOWLEDGE OF ALL DRAWINGS AND SPECIFICATIONS IN THEIR RELATED FIELD. THE FAILURE TO ACQUAINT THEMSELF WITH THIS KNOWLEDGE DOES NOT RELIEVE THE RESPONSIBILITY OF PERFORMING THE WORK PROPERLY. NO ADDITIONAL COMPENSATION SHALL BE ALLOWED BECAUSE OF CONDITIONS THAT OCCUR DUE TO FAILURE TO FAMILIARIZE WORKERS WITH THIS KNOWLEDGE.


CONSULTANTS
CTA
CTA ARCHITECTS ENGINEERS
306 W. RAIL ROAD SUITE 104
MISSOULA, MT 59802
Phone: (406)728-9522
Fax: (406)728-8287



STIPULATION FOR REUSE
THIS DRAWING WAS PREPARED FOR USE ON A SPECIFIC SITE AT FORT WORTH, TX CONTEMPORANEOUSLY WITH ITS ISSUE DATE ON 02/12/18, AND IT IS NOT SUITABLE FOR USE ON A DIFFERENT PROJECT SITE OR AT A LATER TIME. USE OF THIS DRAWING FOR REFERENCE OR EXAMPLE ON ANOTHER PROJECT REQUIRES THE SERVICES OF PROPERLY LICENSED ARCHITECTS AND ENGINEERS. REPRODUCTION OF THIS DRAWING FOR REUSE ON ANOTHER PROJECT IS NOT AUTHORIZED AND MAY BE CONTRARY TO THE LAW.


Walmart Neighborhood Market
FORT WORTH, TX
STORE NO.2979-211
GENERAL REMODEL
JOB NUMBER: USMR-006304

ISSUE BLOCK

| | | |
|---|---|---|
| | 02/12/18 | PERMIT/ BID |
| 30 X 42 | SHEET SET | |

| | |
|---|---|
| CHECKED BY: | JR |
| DRAWN BY: | SP |
| PROTO: | 52 |
| PROTO CYCLE: | 12/29/17 |
| DOCUMENT DATE: | 02/12/18 |

DOCUMENTS WITHOUT SIGNATURE AND REQUIRED SEAL OF AOR/EOR ARE NOT FOR CONSTRUCTION

REGISTERED TO CONDUCT BUSINESS: B002506.43
REGISTERED AS ENGINEERING FIRM: F-2217
REGISTERED AS: CTA INC.
DBA: CTA ARCHITECTS ENGINEERS

STATE OF TEXAS
NICHOLAS P. DOHERTY
111150
LICENSED
PROFESSIONAL ENGINEER
February 07, 2018
License #111150

REFRIGERATION DETAILS

SHEET:
R3


Feb 09, 2018 - 1:27pm - USER stevep
Y:\Walmart\2018 remodels\CYN 2979 Fort Worth, TX\CAD\3620 - R3 REFRIGERATION DETAILS - 2979.dwg